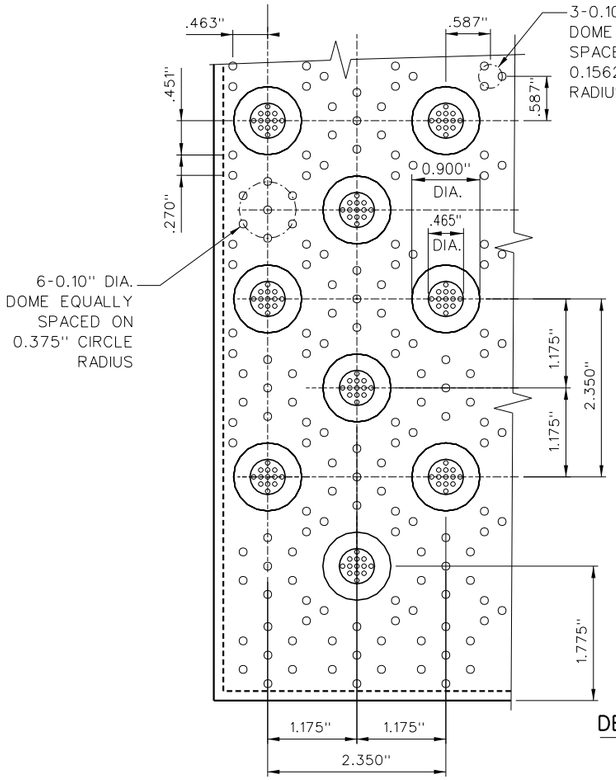

DETAIL 1
FULL SCALE

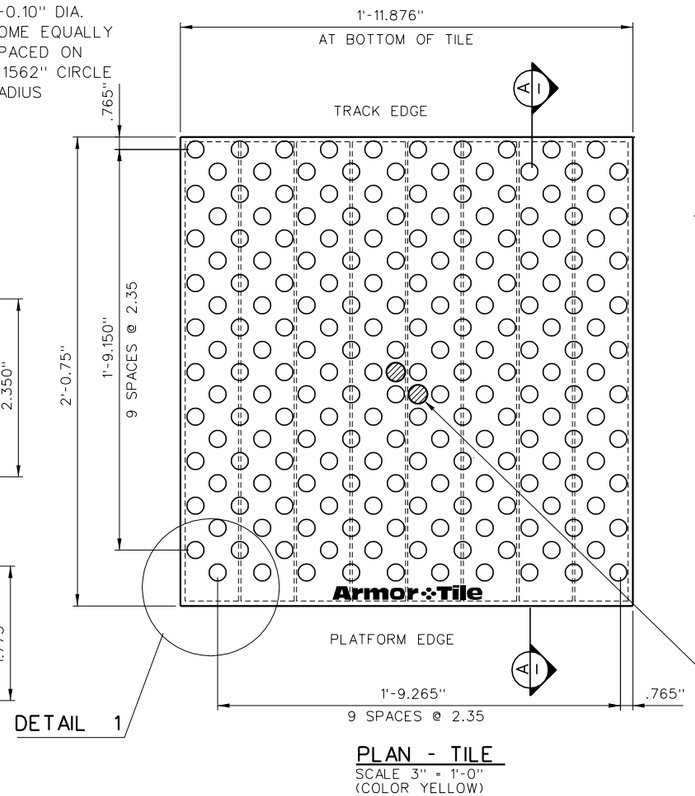

PLAN - TILE
SCALE 3" = 1'-0"
(COLOR YELLOW)

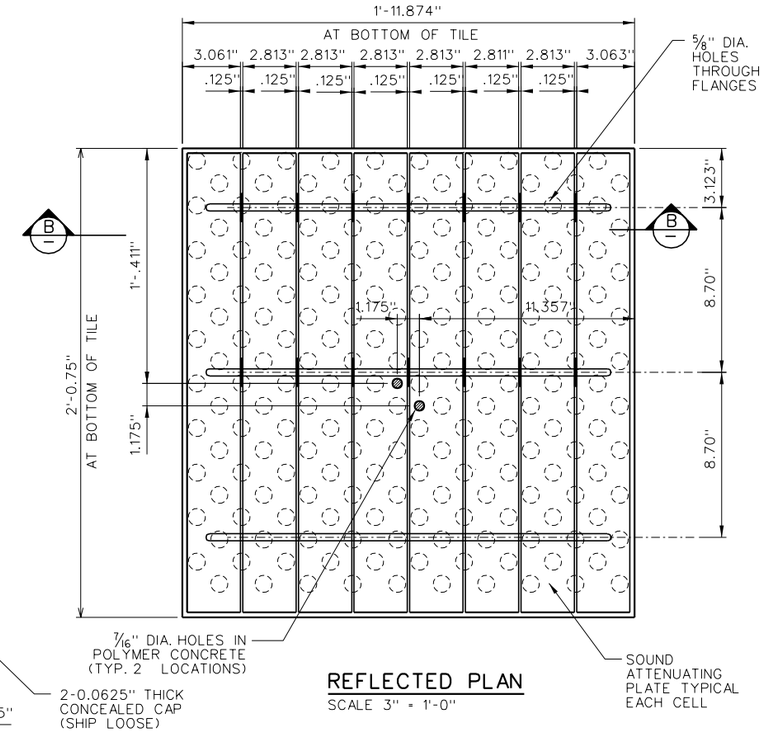

REFLECTED PLAN
SCALE 3" = 1'-0"

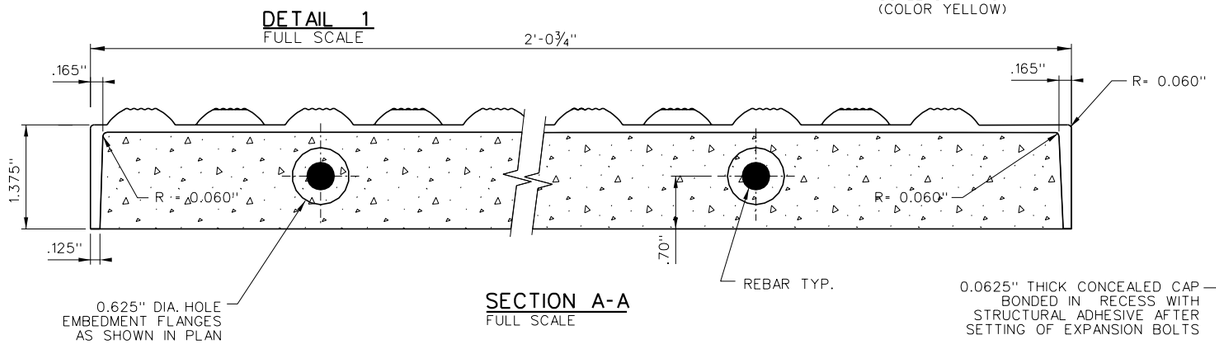

SECTION A-A
FULL SCALE

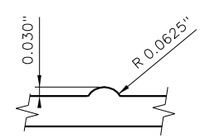

FIELD LEVEL DOME DETAIL

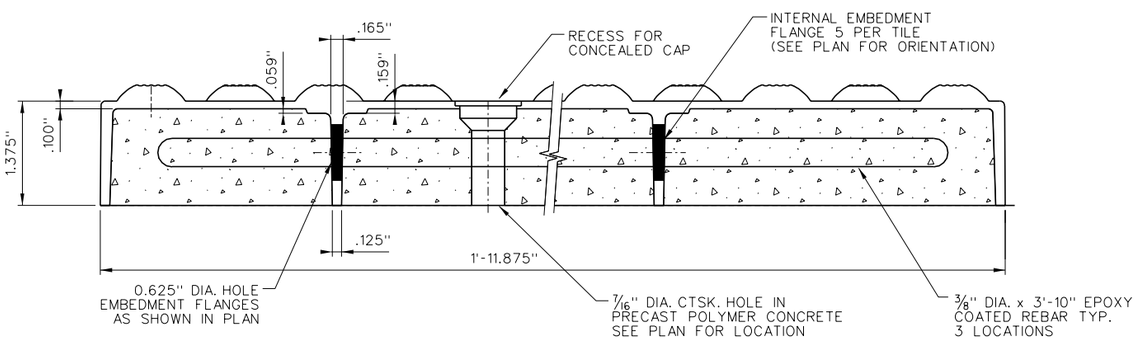

SECTION B-B
FULL SCALE

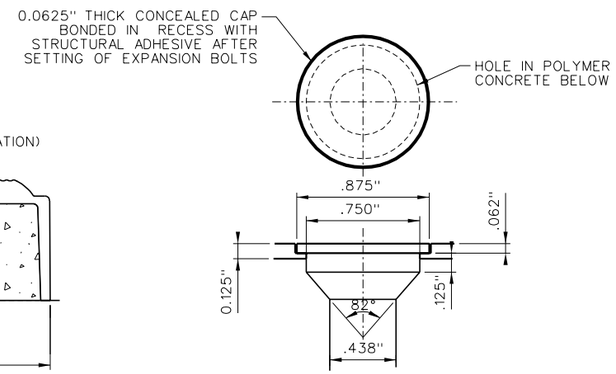

CONCEALED CAP DETAIL
2:1 SCALE

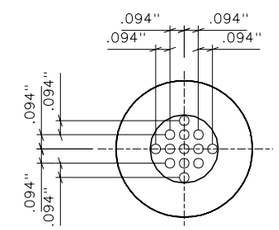

PATTERN DETAIL
2:1 SCALE

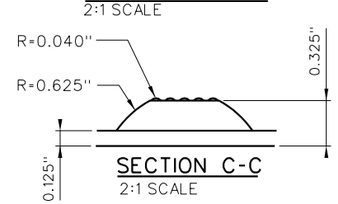

SECTION C-C
2:1 SCALE

ENGINEERED PLASTICS

© 1999 ENGINEERED PLASTICS
CONFIDENTIAL AND PROPRIETARY DOCUMENT
U. S. PATENT NO. 5,303,669, U.S. PATENTS PENDING
Ⓓ KENNETH E. SZEKELY

MATERIAL LIST

ITEM	DESCRIPTION	PART NO.	QT'Y
1	ARMOR TILE (24"x24")	ADA-P044-24	1
2	S.S. A. BOLT 3/8" x 5"	AT-SS-01	2

DRAWING	DESCRIPTION
ADA-P044-GEN1	INSTALLATION DRAWING

COLOR YELLOW CONFORMING TO FEDERAL COLOR NUMBER 33538, AS SHOWN IN TABLE IV OF STD. 595B

No.	DATE	REVISION	APPR.
0	09/01/99	ISSUED	K.S.

SCALE: AS NOTED, FULL SIZE ONLY

DESIGNED	BY K.E.S.	DATE 08/90
DRAWN	M.D.	05/02/97
CHECKED		
PROJECT MANAGER		
TRADE: DETECTABLE WARNING SURFACE	PART NO.: SEE MATERIAL LIST	
MATERIAL: VITRIFIED POLYMER COMPOSITE		

SUBJECT
Armor-Tile ADA
SOUND ATTENUATING TACTILE TILE
DETECTABLE WARNING
SURFACE SYSTEM

PROJECT
24"x24" PAVER TILE (2' x 2' UNIT)
PLATFORM EDGE TACTILE TILE
PLAN AND DETAILS

DRAWING NO. ADA-P044-GEN2-24X24
REV. NO. 0

d:\eng_plastics\armor-tile ada\paver\adap044gen2-2424m.dgn
DOBBM 06 SEP 2000 21:16:19