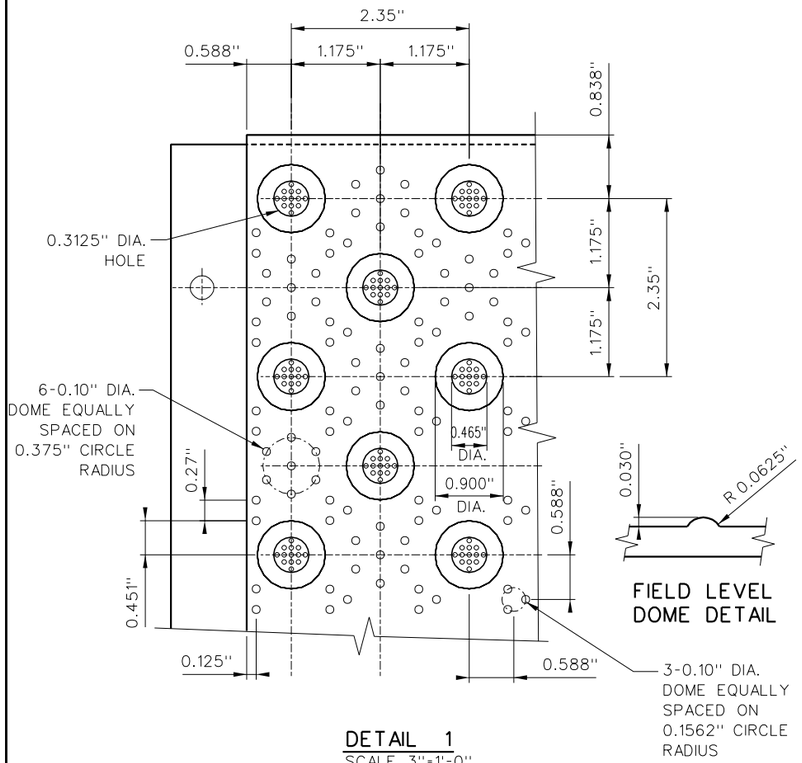

DETAIL 1
SCALE 3"=1'-0"

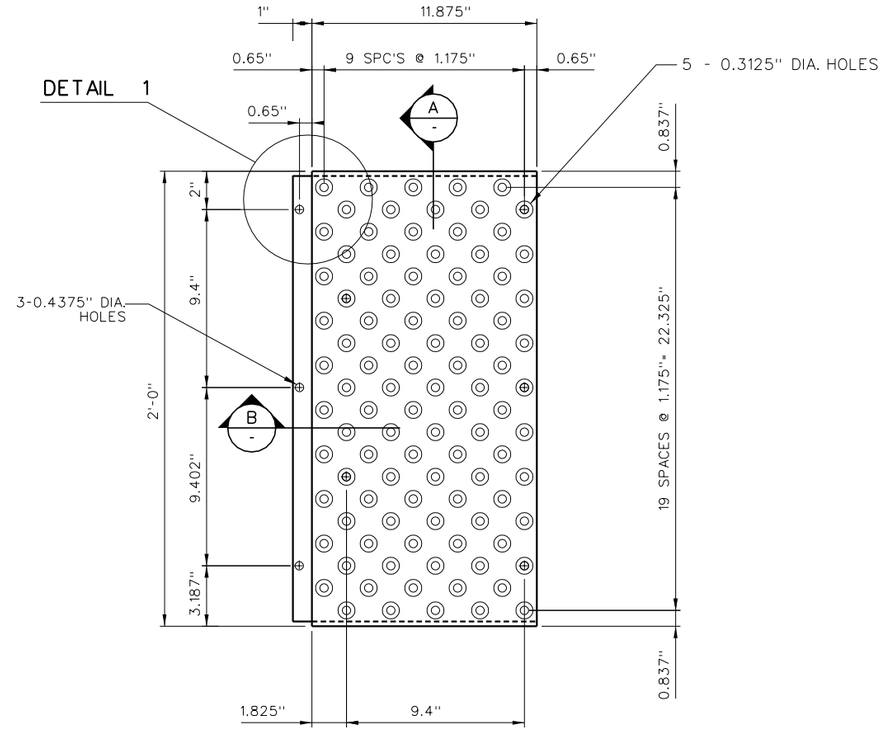

PLAN-TACTILE TILE
FULL SCALE

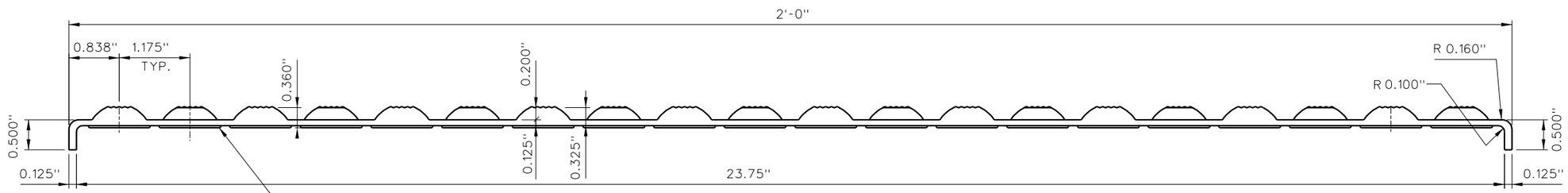

SECTION A-A
FULL SCALE

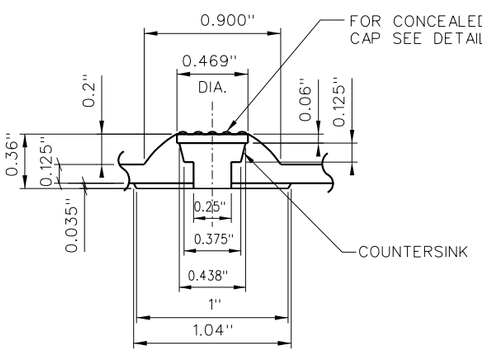

TILE SECTION
TRUNCATED DOME FASTENER LOCATION

FASTENER DETAIL
2:1 SCALE

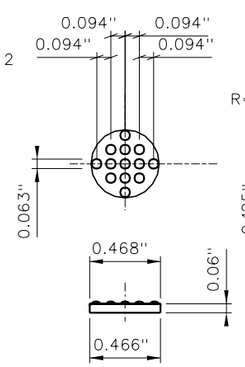

DETAIL 2
2:1 SCALE

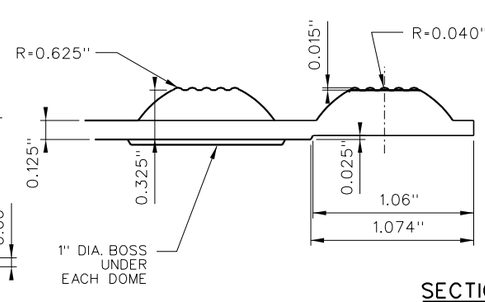

SECTION B-B
2:1 SCALE

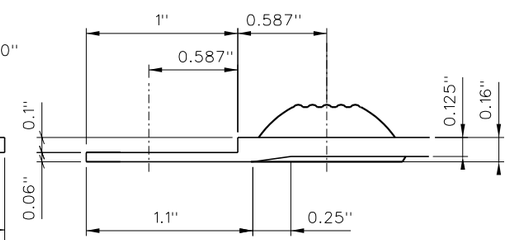

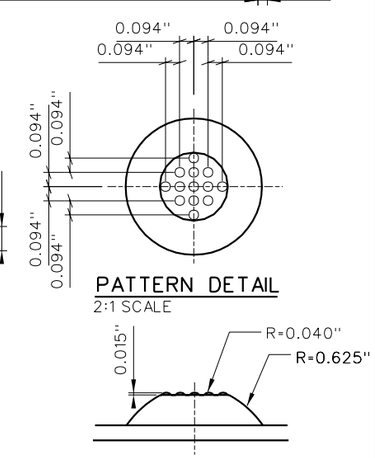

PATTERN DETAIL
2:1 SCALE

SECTION B-B
2:1 SCALE

ENGINEERED PLASTICS

© 1999 ENGINEERED PLASTICS
CONFIDENTIAL AND PROPRIETARY DOCUMENT
U. S. PATENT NO. 5,303,669, U.S. PATENTS PENDING

Ⓓ KENNETH E. SZEKELY

MATERIAL LIST

ITEM	DESCRIPTION	PART NO.	QT'Y
1	ARMOR-TILE ADA	AT-S023-12	1
2	S.S. 1/4" x 1 3/8" ANCHOR	AT-AF-01	6

No.	DATE	REVISION	APPR.
0	09/01/99	ISSUED	K.S.

SCALE: AS NOTED FULL SIZE

DESIGNED	BY K.E.S.	DATE 08/91
DRAWN	M.D.	10/21/98
CHECKED		
PROJECT MANAGER		
TRADE DETECTABLE WARNING SURFACE	PART NO.	
MATERIAL VITRIFIED POLYMER COMPOSITE		

SUBJECT
Armor-Tile ADA
SOUND ATTENUATING TACTILE TILE
DETECTABLE WARNING
SURFACE SYSTEM
MATERIAL DRAWING

PROJECT
PLATFORM EDGE TACTILE TILE
12" x 24" SURFACE APPLIED
PLANS AND DETAILS

DRAWING NO. ADA-S023-GEN2-24x12
REV. NO. 0

d:\eng_plastics\armor-tile ada\surface applied\adas023gen2-2412m.dgn
06 SEP 2000 21:18:10
DOBBM