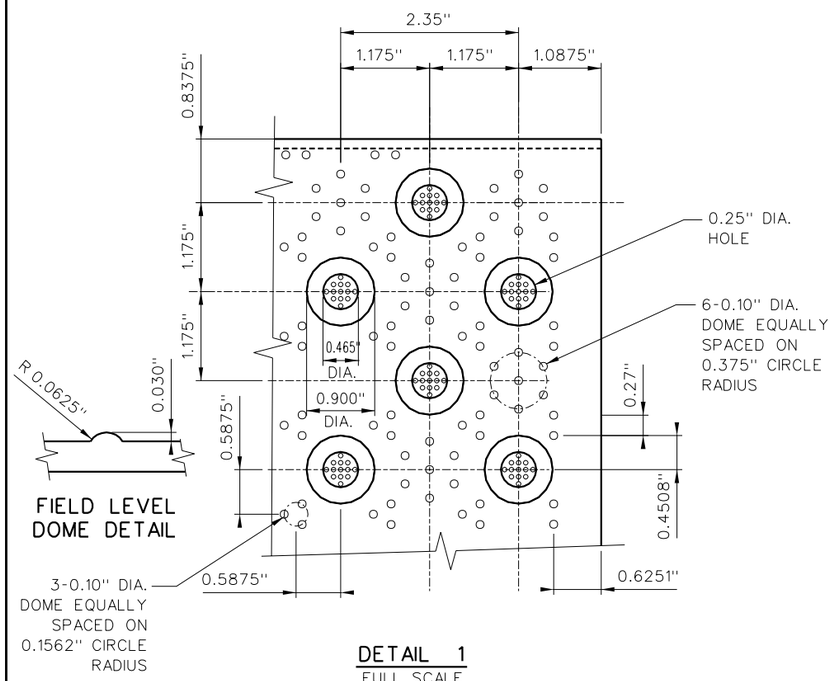

DETAIL 1
FULL SCALE

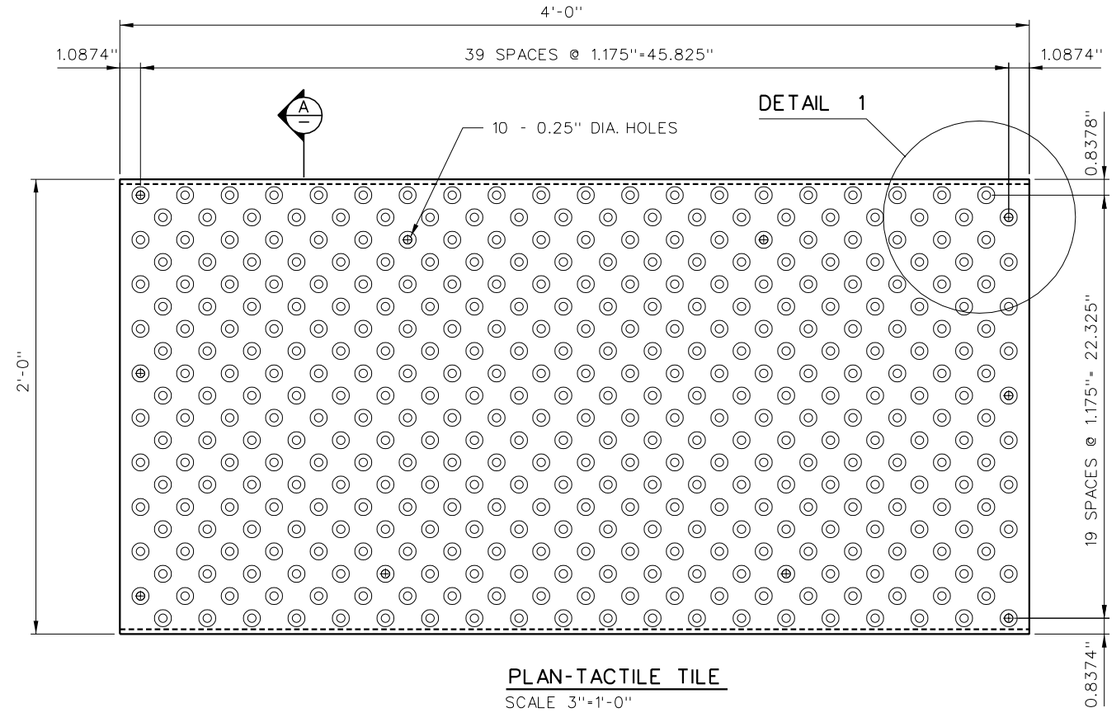

PLAN-TACTILE TILE
SCALE 3"=1'-0"

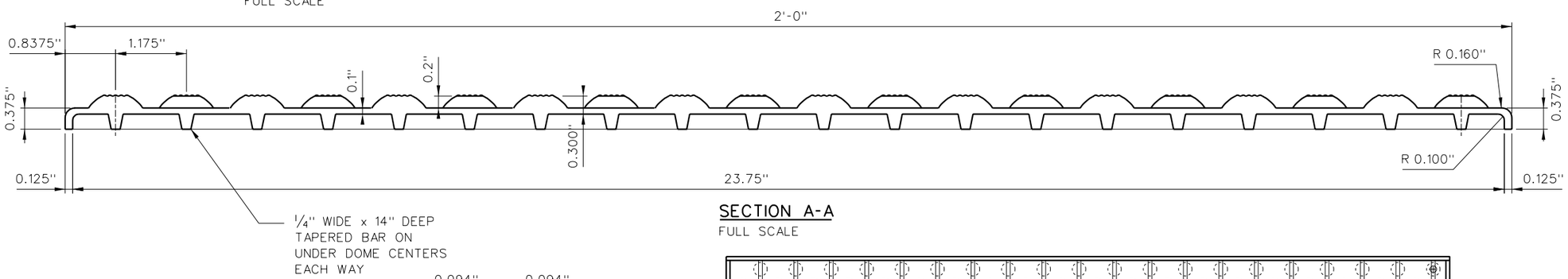

SECTION A-A
FULL SCALE

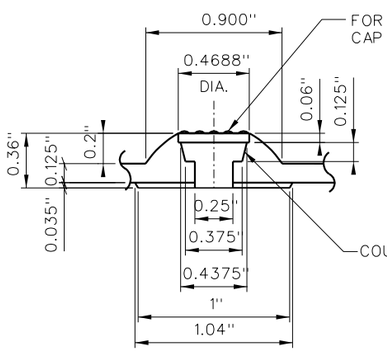

TILE SECTION
TRUNCATED DOME FASTENER LOCATION

FASTENER DETAIL
2:1 SCALE

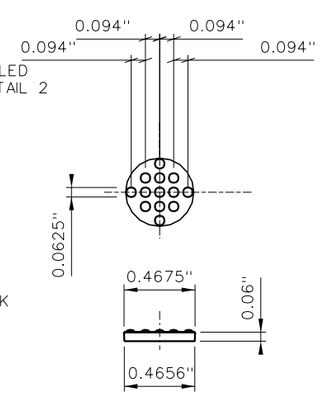

DETAIL 2
2:1 SCALE

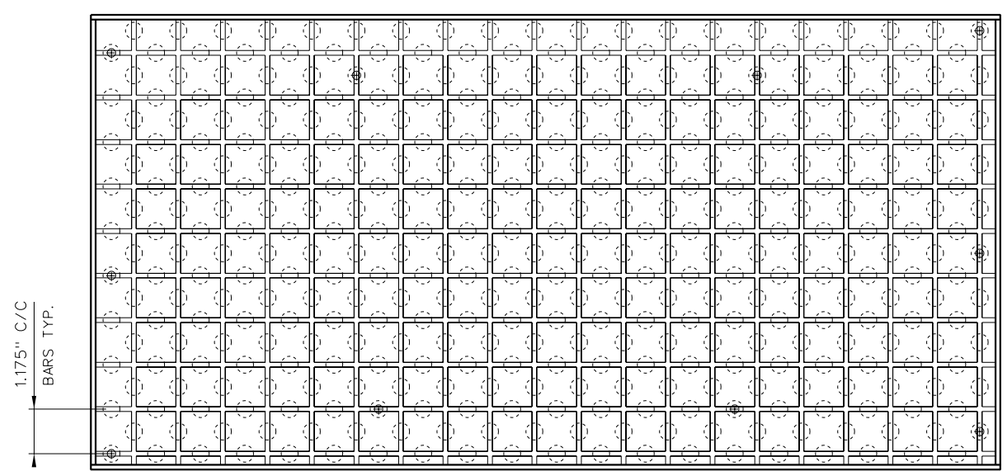

REFLECTED PLAN-TACTILE TILE
SCALE 3"=1'-0"

ENGINEERED PLASTICS

© 1999 ENGINEERED PLASTICS
CONFIDENTIAL AND PROPRIETARY DOCUMENT
U. S. PATENT NO. 5,303,669, U.S. PATENTS PENDING
Ⓓ KENNETH E. SZEKELY

MATERIAL LIST

ITEM	DESCRIPTION	PART NO.	QT'Y
1	ARMOR TILE	AT-S023-48	1

No.	DATE	REVISION	APPR.
0	09/01/99	ISSUED	K.S.

SCALE AS NOTED FULL SIZE (0 1 2 3 4 5 6" / 3"=1'-0")

DESIGNED	BY K.E.S.	DATE 08/91
DRAWN	M.D.	05/12/98
CHECKED		
PROJECT MANAGER		
TRADE DETECTABLE WARNING SURFACE	PART NO.	
MATERIAL VITRIFIED POLYMER COMPOSITE		

SUBJECT
Armor-Tile ADA
SOUND ATTENUATING TACTILE TILE
DETECTABLE WARNING
SURFACE SYSTEM
MATERIAL DRAWING

PROJECT
DETECTABLE WARNING STRIPS
48"x24" SURFACE APPLIED
PLANS AND DETAILS

DRAWING NO. ADA-S023-GEN4-24x48
REV. NO. 0

$FILE$ $USER$ $DATE$ $TIME$